S.C. TOTALGAZ INDUSTRIE S.R.L.
Str. Păcurari nr.128 Iasi • România
Tel: 0040-232-216.391
0040-232-216.392
Fax: 0040-232-215.983
E-mail: office@totalgaz.ro
www.totalgaz.ro

Gas Valves

TOTALGAZ
INDUSTRIE

TOTALGAZ INDUSTRIE

TOTALGAZ INDUSTRIE is a company based entirely on Romanian capital. Currently, our company is known as one of the most representative Romanian manufacturers and vendors of equipment and installations for natural gas transportation and distribution: pressure regulators, regulating - metering - delivery stations, odorizing systems, noise silencers, gas burners, safety shut-off appliances, gas filters, filter heaters, filter separators, gas heaters, gas valves, gas separators, safety shut-off valves, pressure relief valves.

The focus on manufacturing engineering activities, continuous improvement of conformity to the product requirements and multiple professional specializations for employees contributed to TOTALGAZ INDUSTRIE receiving the International Quality Crown Award – Diamond Category granted for excellence in business.

TOTALGAZ INDUSTRIE has implemented a quality-environment-occupational health and safety integrated management system in accordance with the following standards:

- ISO 9001: 2008
- ISO 14001: 2004
- OHSAS 18001: 2007

The products manufactured by TOTALGAZ INDUSTRIE have been evaluated and certified as regards their CE conformity by ISCIR CERT Bucharest – Romanian Authority for Vessels and Hoisting Units.

RS & RF

testing

The entire manufacturing process is monitored and includes the following tests and inspections:
- acceptance inspection of raw materials
- flux inspection of different component parts
- assembling tests
- pressure tests
- non-destructive testing
- final inspection.

All pressure tests performed on valves are in accordance with:
- ISO 5208
- API 6D
- API 598
- EN 122 66 (Part 1 and 2).

All valves and their actuators are submitted to an operational test; the value of the breakaway torque is also verified.

RS & RF

description

The valves described in this document are valves intended for ON-OFF operation.

The valves are manually actuated by means of a lever or quarter-turn worm gearbox and hand wheel (depending on the moment required for actuation). Upon request, the valves can be delivered with any other type of actuator (electrical, pneumatic, hydraulic, etc.) or can be equipped with various accessories (position indicators, lockout devices, etc.).

RS 900

RS 900 ball valves are fully welded constructions that need very little maintenance. The sealing is ensured by metallic seats with different constructive variants. The seats are designed so that the force pressing on the ball increases as the pipe pressure rises.

Upon request, the valves can be provided with graphite gaskets for the fire-safe design or with an additional sealing for emergency cases by sealant injection.

The weld ends and the flanges are protected with covers to prevent deterioration or ingress of impurities into the valve.

RS 903

RS 903 ball valves have a three-piece body made of forged or cast carbon steel; the bodies are joined by means of bolts and nuts or screws and the sealing consists of an elastomeric O-ring.

Upon request, the fire-safe valves can be provided with graphite gaskets for the fire-safe design or with an additional sealing for emergency cases by sealant injection.

RF 922

RF 922 valves provide tight closure by means of the butterfly throttle for OPEN-CLOSED operation and are intended for medium, reduced and low pressure natural gas networks.

Upon request, the butterfly valves can be supplied with the following types of actuators:
- manual actuator (gear box)
- electrical actuator
- pneumatic actuator
- mixed actuator.

RS 900

component parts

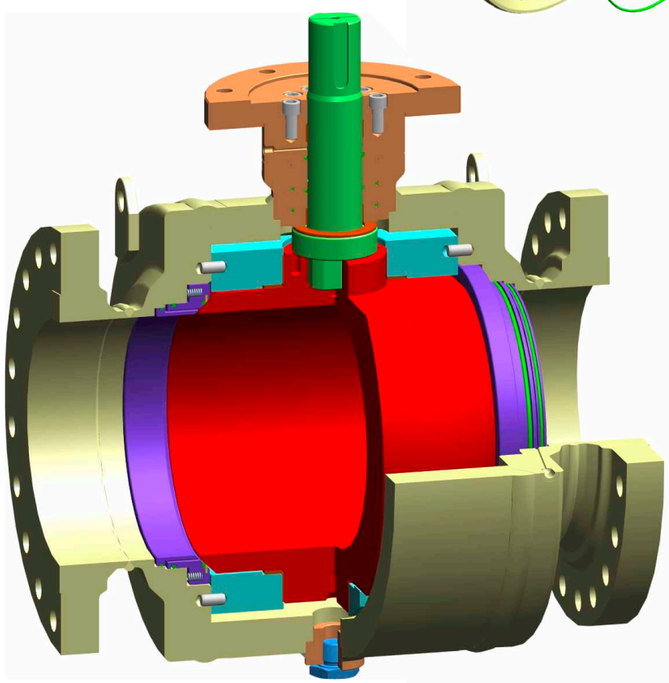

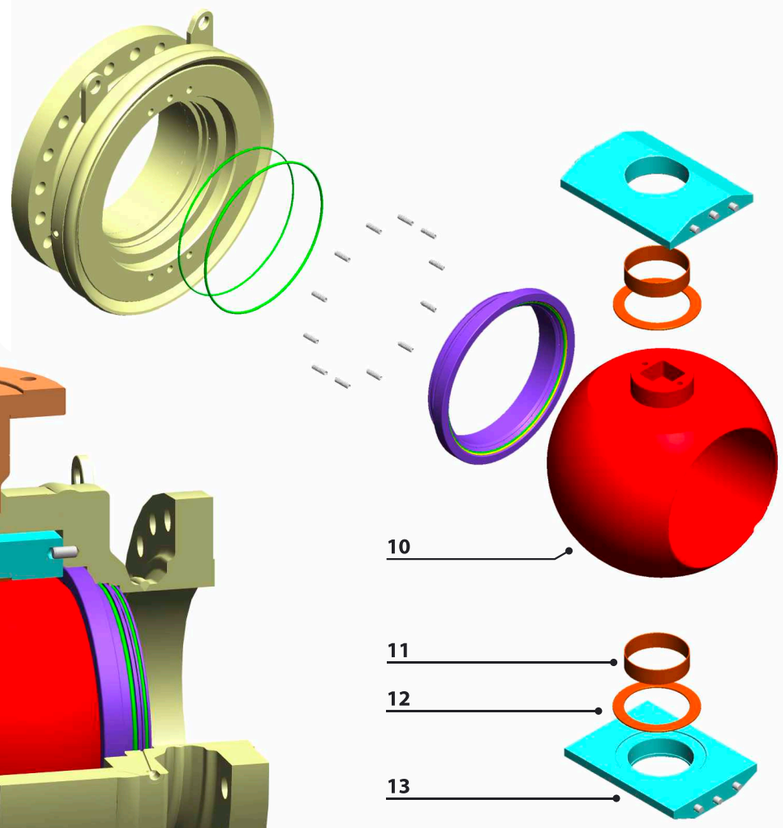

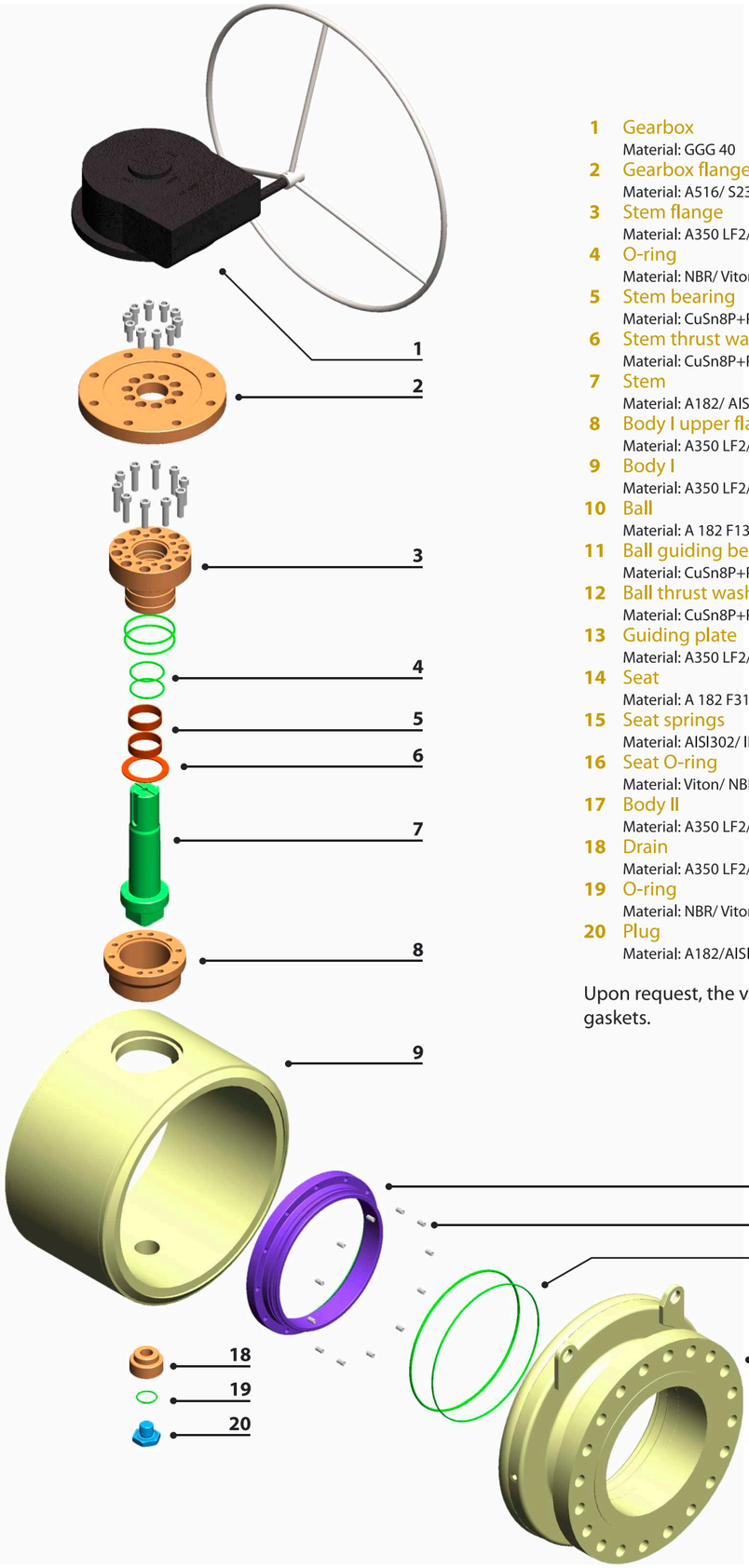

1 Gearbox
Material: GGG 40

2 Gearbox flange
Material: A516/ S235J2 / Standard: ASTM A516/ EN 10025

3 Stem flange
Material: A350 LF2/ P355GH / Standard: ASTM A350/ EN 10028-2

4 O-ring
Material: NBR/ Viton

5 Stem bearing
Material: CuSn8P+PTFE/ Permaglide/ Steel+PTFE

6 Stem thrust washer
Material: CuSn8P+PTFE/ Permaglide/ Steel+PTFE

7 Stem
Material: A182/ AISI 420 / Standard: ASTM A182/ EN 10088-1

8 Body I upper flange
Material: A350 LF2/ S235J2 / Standard: ASTM A350/ EN 10025

9 Body I
Material: A350 LF2/ P355GH / Standard: ASTM A350/ EN 10028-2

10 Ball
Material: A 182 F136 + TC/A350 LF2+ENP or Cr

11 Ball guiding bearing
Material: CuSn8P+PTFE/ Permaglide/ Steel+PTFE

12 Ball thrust washer
Material: CuSn8P+PTFE/ Permaglide/ Steel+PTFE

13 Guiding plate
Material: A350 LF2/ S235J2 / Standard: ASTM A350/ EN 10025

14 Seat
Material: A 182 F316 + TC/A350 LF2+ENP or Cr

15 Seat springs
Material: AISI302/ INCONEL

16 Seat O-ring
Material: Viton/ NBR

17 Body II
Material: A350 LF2/ P355GH / Standard: ASTM A350/EN 10028-2

18 Drain
Material: A350 LF2/ S235J2 / Standard: ASTM A350/ EN 10025

19 O-ring
Material: NBR/ Viton

20 Plug
Material: A182/AISI 420/ Standard: ASTM A182/ EN 10088-1

Upon request, the valve can be provided with graphite gaskets.

RS 900

component parts

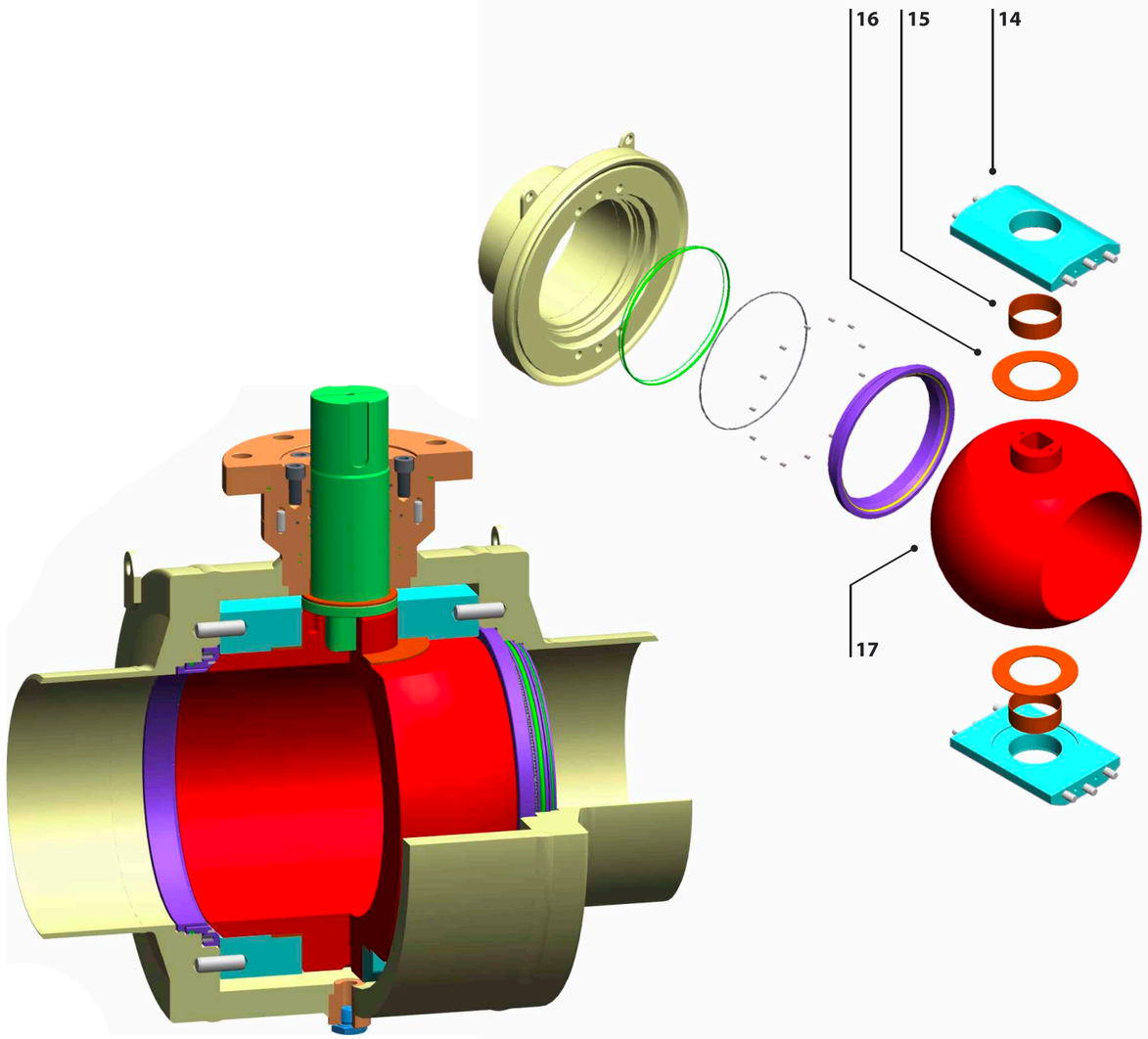

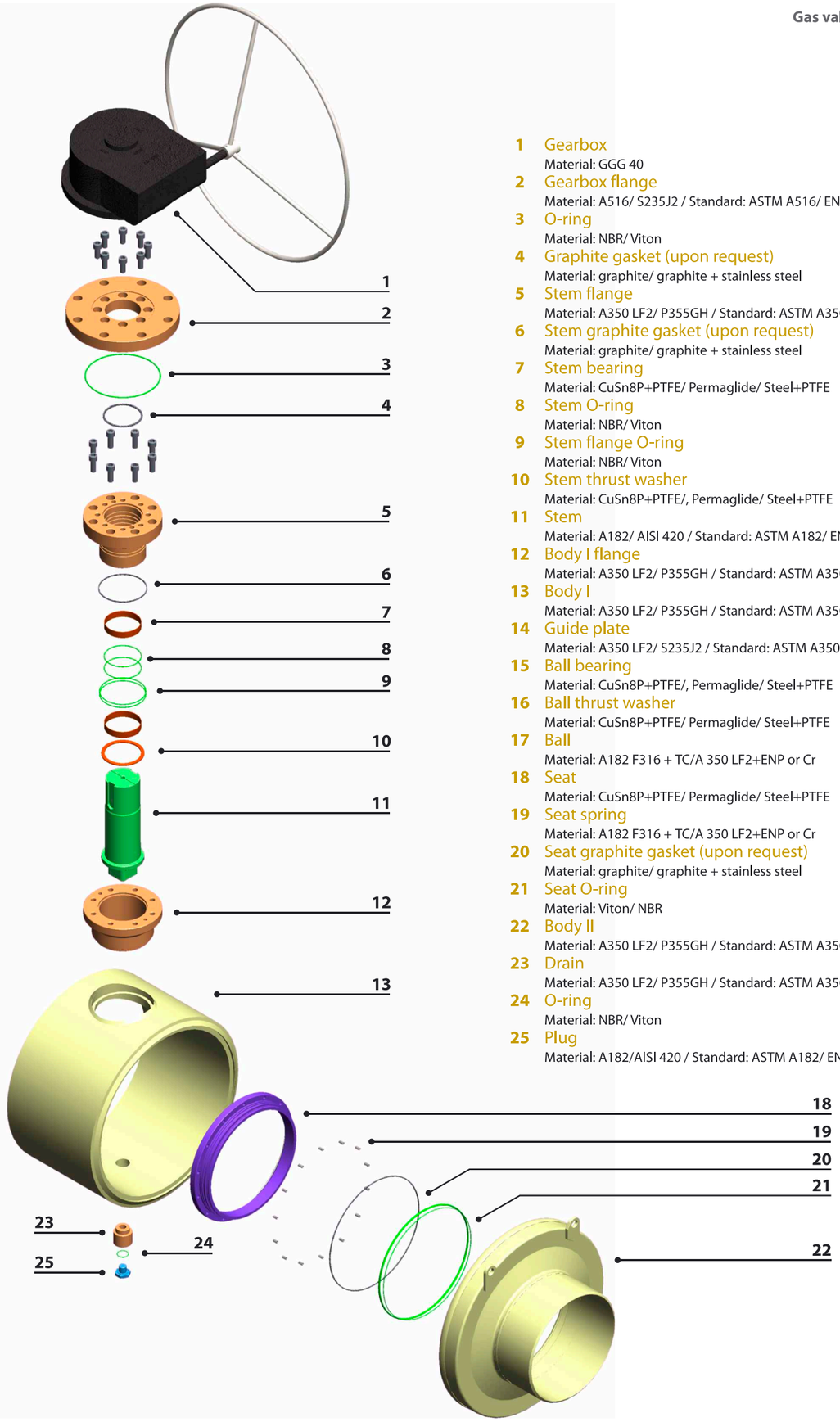

1 Gearbox
Material: GGG 40

2 Gearbox flange
Material: A516/ S235J2 / Standard: ASTM A516/ EN 10025

3 O-ring
Material: NBR/ Viton

4 Graphite gasket (upon request)
Material: graphite/ graphite + stainless steel

5 Stem flange
Material: A350 LF2/ P355GH / Standard: ASTM A350/ EN 10028-2

6 Stem graphite gasket (upon request)
Material: graphite/ graphite + stainless steel

7 Stem bearing
Material: CuSn8P+PTFE/ Permaglide/ Steel+PTFE

8 Stem O-ring
Material: NBR/ Viton

9 Stem flange O-ring
Material: NBR/ Viton

10 Stem thrust washer
Material: CuSn8P+PTFE/, Permaglide/ Steel+PTFE

11 Stem
Material: A182/ AISI 420 / Standard: ASTM A182/ EN 10088-1

12 Body I flange
Material: A350 LF2/ P355GH / Standard: ASTM A350/EN 10028-2

13 Body I
Material: A350 LF2/ P355GH / Standard: ASTM A350/ EN 10028-2

14 Guide plate
Material: A350 LF2/ S235J2 / Standard: ASTM A350/ EN 10025

15 Ball bearing
Material: CuSn8P+PTFE/, Permaglide/ Steel+PTFE

16 Ball thrust washer
Material: CuSn8P+PTFE/ Permaglide/ Steel+PTFE

17 Ball
Material: A182 F316 + TC/A 350 LF2+ENP or Cr

18 Seat
Material: CuSn8P+PTFE/ Permaglide/ Steel+PTFE

19 Seat spring
Material: A182 F316 + TC/A 350 LF2+ENP or Cr

20 Seat graphite gasket (upon request)
Material: graphite/ graphite + stainless steel

21 Seat O-ring
Material: Viton/ NBR

22 Body II
Material: A350 LF2/ P355GH / Standard: ASTM A350/EN 10028-2

23 Drain
Material: A350 LF2/ P355GH / Standard: ASTM A350/EN 10028-2

24 O-ring
Material: NBR/ Viton

25 Plug
Material: A182/AISI 420 / Standard: ASTM A182/ EN 10088

RS 900

component parts

1 Gearbox
Material: GGG 40

2' Gearbox attachment flange
Material: A516/ S235J2 / Standard: ASTM A516/ EN 10025

2" Stem attachment flange
Material: A516/ S235J2 / Standard: ASTM A516/ EN 10025

3 Stem flange
Material: A350 LF2/ P355GH / Standard: ASTM A350/ EN 10028-2

4 Stem graphite gasket (upon request)
Material: graphite/ graphite + stainless steel

5 Stem bearing
Material: CuSn8P+PTFE/, Permaglide/ Steel+PTFE

6 Stem graphite gasket (upon request)
Material: graphite/ graphite + stainless steel

7 Stem O-ring
Material: NBR/ Viton

8 Stem flange O-ring
Material: NBR/ Viton

9 Stem thrust washer
Material: CuSn8P+PTFE/, Permaglide/ Steel+PTFE

10 Stem extension
Material: A182/ AISI 420 / Standard: ASTM A182/ EN 10088-1

11 Spacer
Material: A350 LF2/ P355GH / Standard: ASTM A350/ EN 10025

12 Extension flange
Material: A516/ S235J2 / Standard: ASTM A516/ EN 10025

13 Extension body
Material: A106 gr.B/P265GH/ Standard: ASTM A106/ EN 10216-2

14 Extension attchment flange
Material: A516/ S235J2 / Standard: ASTM A516/ EN 10025

15 Extension O-ring
Material: NBR/ Viton

16 Stem
Material: A182/ AISI 420 / Standard: ASTM A182/ EN 10088-1

17 Body I flange
Material: A350 LF2/ A355 GH / Standard: ASTM A350/ EN 10028

18 Guiding plate
Material: A516/ S235J2 / Standard: ASTM A516/ EN 10025

19 Ball guiding bearing
Material: CuSn8P+PTFE/, Permaglide/ Steel+PTFE

20 Ball thrust washer
Material: CuSn8P+PTFE/, Permaglide/ Steel+PTFE

21 Ball
Material: A182 F316+TC/ A350 LF2+ENP or Cr

22 Body I
Material: A350 LF2/ P355GH / Standard: ASTM A350/ EN 10028-2

23 Seat
Material: A182 F316+TC/ A350 LF2+ENP or Cr

24 Seat spring
Material: AISI302/ INCONEL

25 Seat graphite gasket (upon request)
Material: graphite/ graphite + stainless steel

26 Seat O-ring
Material: Viton/ NBR

27 Body II
Material: A350 LF2/ P355GH / Standard: ASTM A350/EN 10028-2

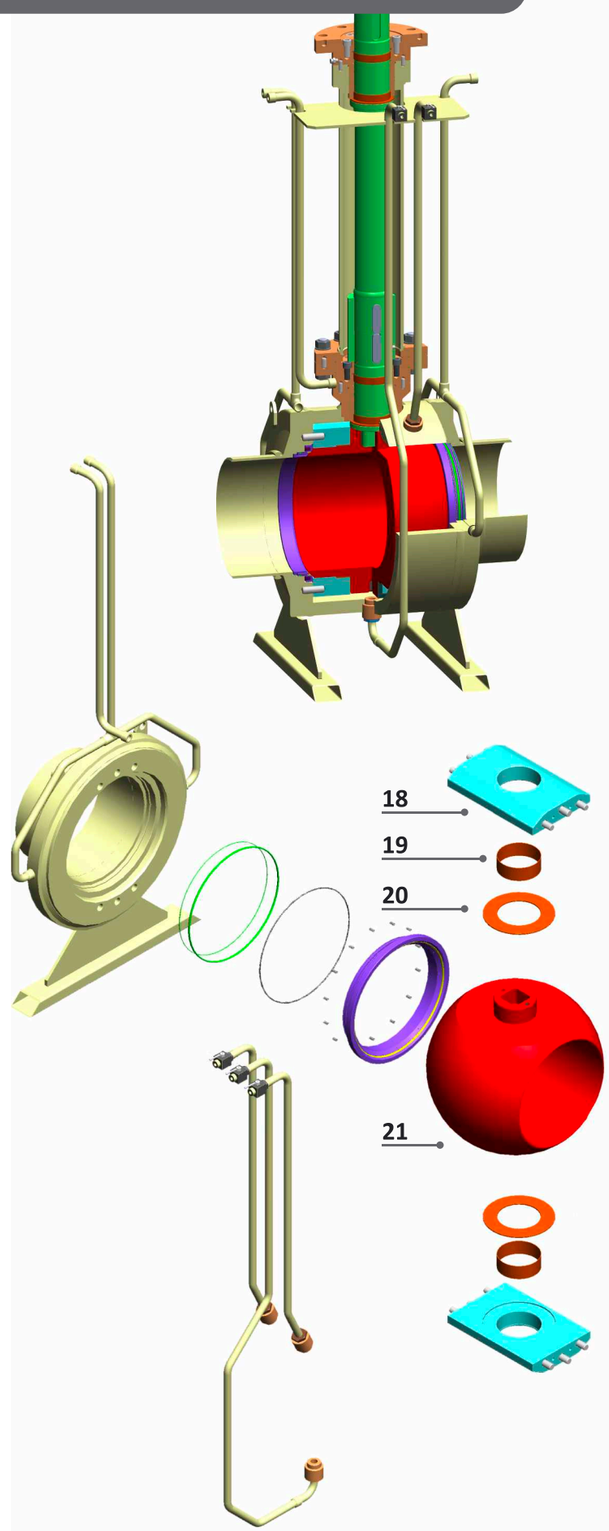

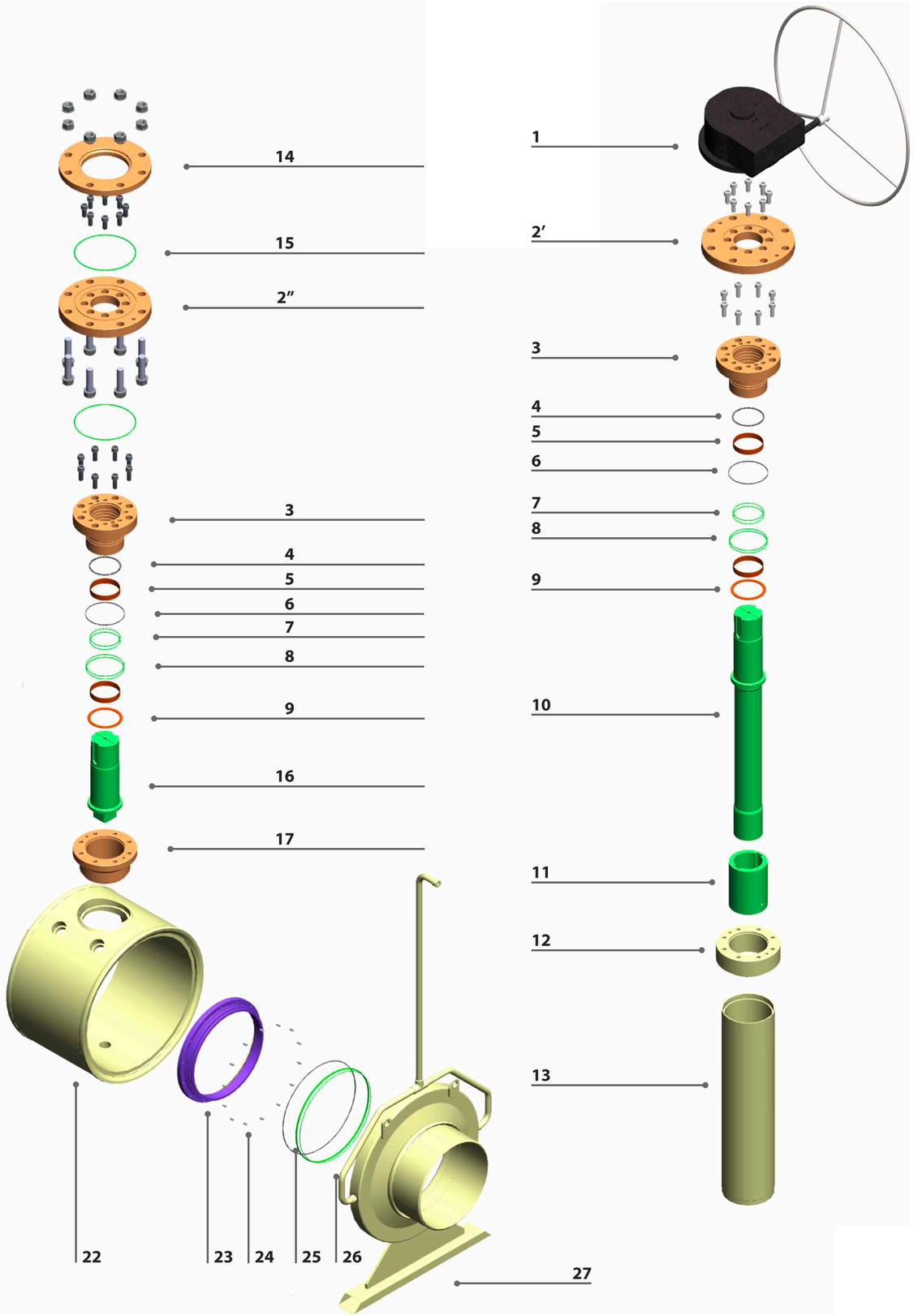

RS 903

component parts

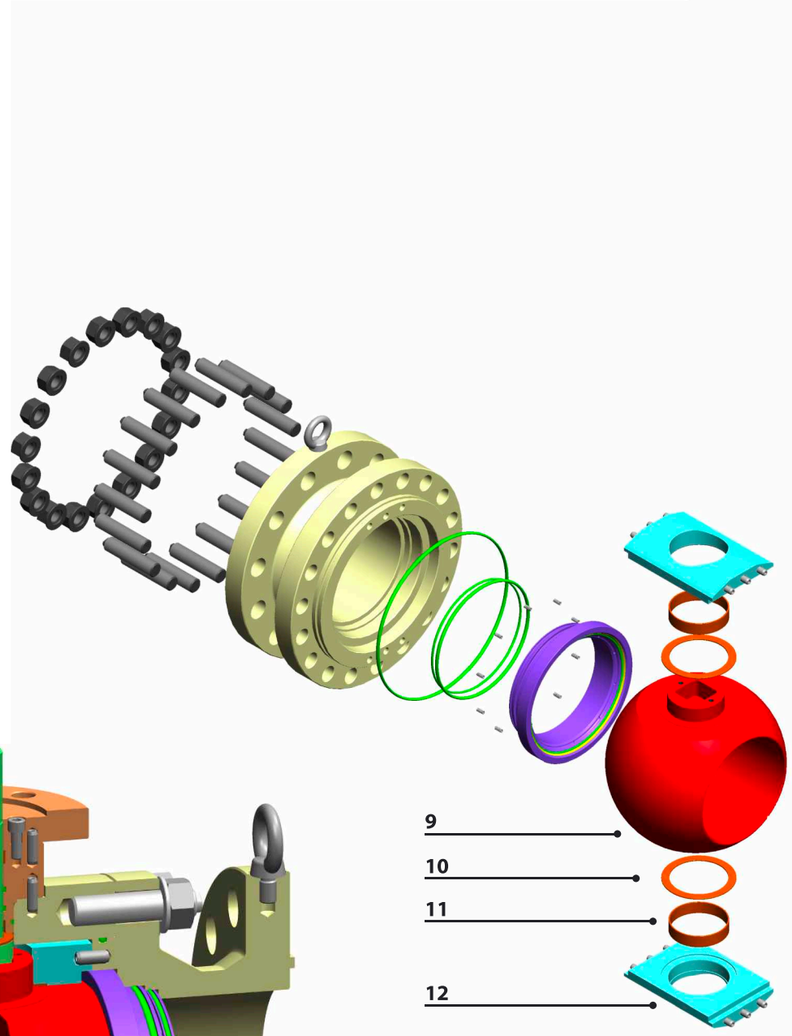

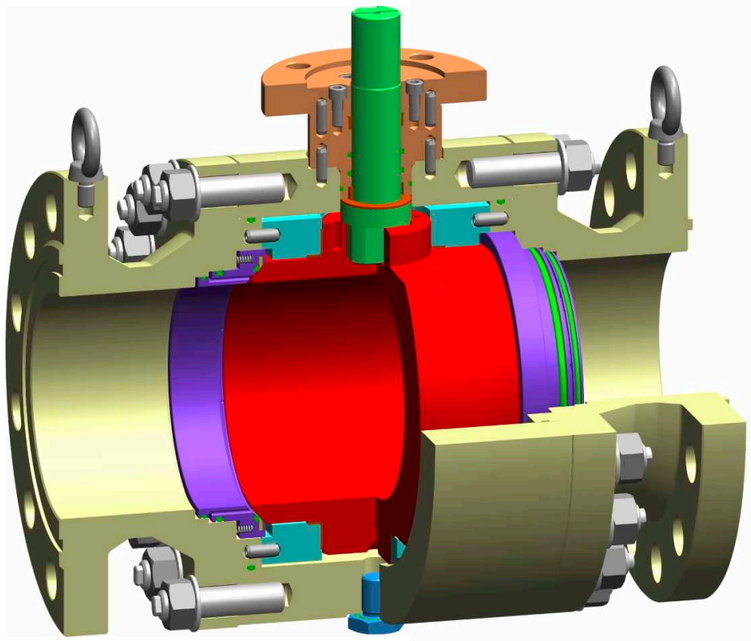

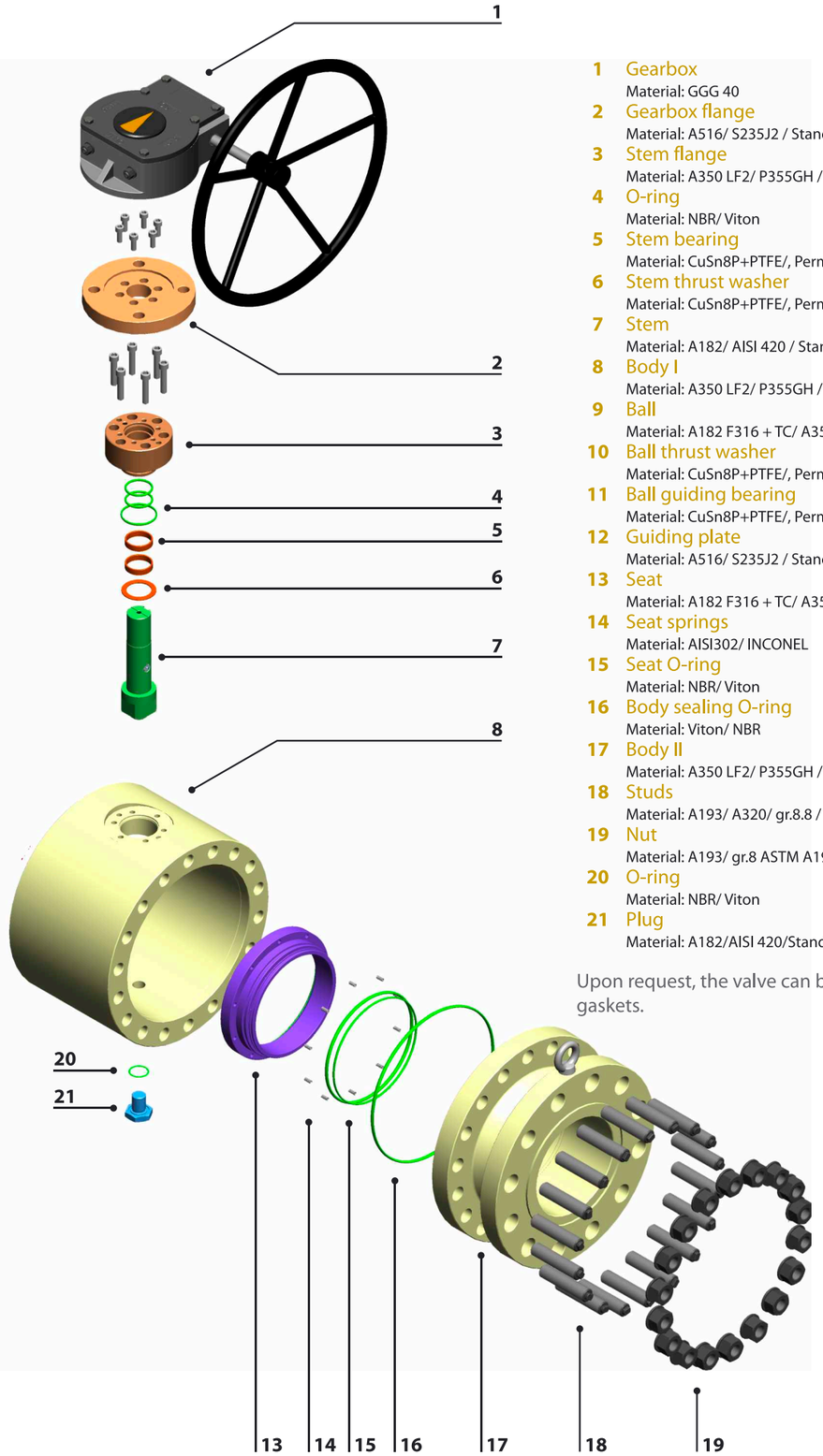

1 Gearbox
Material: GGG 40

2 Gearbox flange
Material: A516/ S235J2 / Standard: ASTM A516/ EN 10025

3 Stem flange
Material: A350 LF2/ P355GH / Standard: ASTM A350/ EN 10028-2

4 O-ring
Material: NBR/ Viton

5 Stem bearing
Material: CuSn8P+PTFE/, Permaglide/ Stetel+PTFE

6 Stem thrust washer
Material: CuSn8P+PTFE/, Permaglide/ Steel+PTFE

7 Stem
Material: A182/ AISI 420 / Standard: ASTM A182/ EN 10088-1

8 Body I
Material: A350 LF2/ P355GH / Standard: ASTM A350/EN 10028-2

9 Ball
Material: A182 F316 + TC/ A350 LF2+ENP or Cr

10 Ball thrust washer
Material: CuSn8P+PTFE/, Permaglide/ Steel+PTFE

11 Ball guiding bearing
Material: CuSn8P+PTFE/, Permaglide/ Steel+PTFE

12 Guiding plate
Material: A516/ S235J2 / Standard: ASTM A516/ EN 10025

13 Seat
Material: A182 F316 + TC/ A350 LF2+ENP or Cr

14 Seat springs
Material: AISI302/ INCONEL

15 Seat O-ring
Material: NBR/ Viton

16 Body sealing O-ring
Material: Viton/ NBR

17 Body II
Material: A350 LF2/ P355GH / Standard: ASTM A350/EN 10028-2

18 Studs
Material: A193/ A320/ gr.8.8 / Standard: ASTM A193/ ASTM A320

19 Nut
Material: A193/ gr.8 ASTM A193

20 O-ring
Material: NBR/ Viton

21 Plug
Material: A182/AISI 420/Standard: ASTM A182/ EN 10088

Upon request, the valve can be provided with graphite gaskets.

RF 922

component parts

1 Gearbox
Material: GGG40
2 Stem flange
Material: A350 LF2/ P355GH / Standard: ASTM A350/ EN 10028-2
3 Gearbox flange
Material: A516 / S235J2 / Standard: ASTM A516/ EN 10025
4 Actuating stem
Material: A182/ AISI 420 / Standard: ASTM A182/ EN 10088-1
5 Intermediate bearing
Material: P265TR2 / Standard: EN 10216-1
6 O-ring
Material: NBR/ Viton
7 Guiding bearing
Material: CuSn6Zn4Pb4
8 Body
Material: A350 LF2/ P355GH / Standard: ASTM A350/ EN 10028-2
9 Gasket attachment ring
Material: A516 / S235J2 / Standard: ASTM A516/ EN 10025
10 Guiding stem
Material: A182/ AISI 420 / Standard: ASTM A182/ EN 10088-1
11 Guiding stem cover
Material: S235JR / Standard: EN 10025
12 Cylinder pin
Material: C45 / Standard: EN 10083-2
13 Stem pocket
Material: S235JR / Standard: EN 10025
14 Stem key
Material: E355 / Standard: EN 10025
15 Disk
Material: S235JR / Standard: EN 10025
16 Gasket
Material: NBR

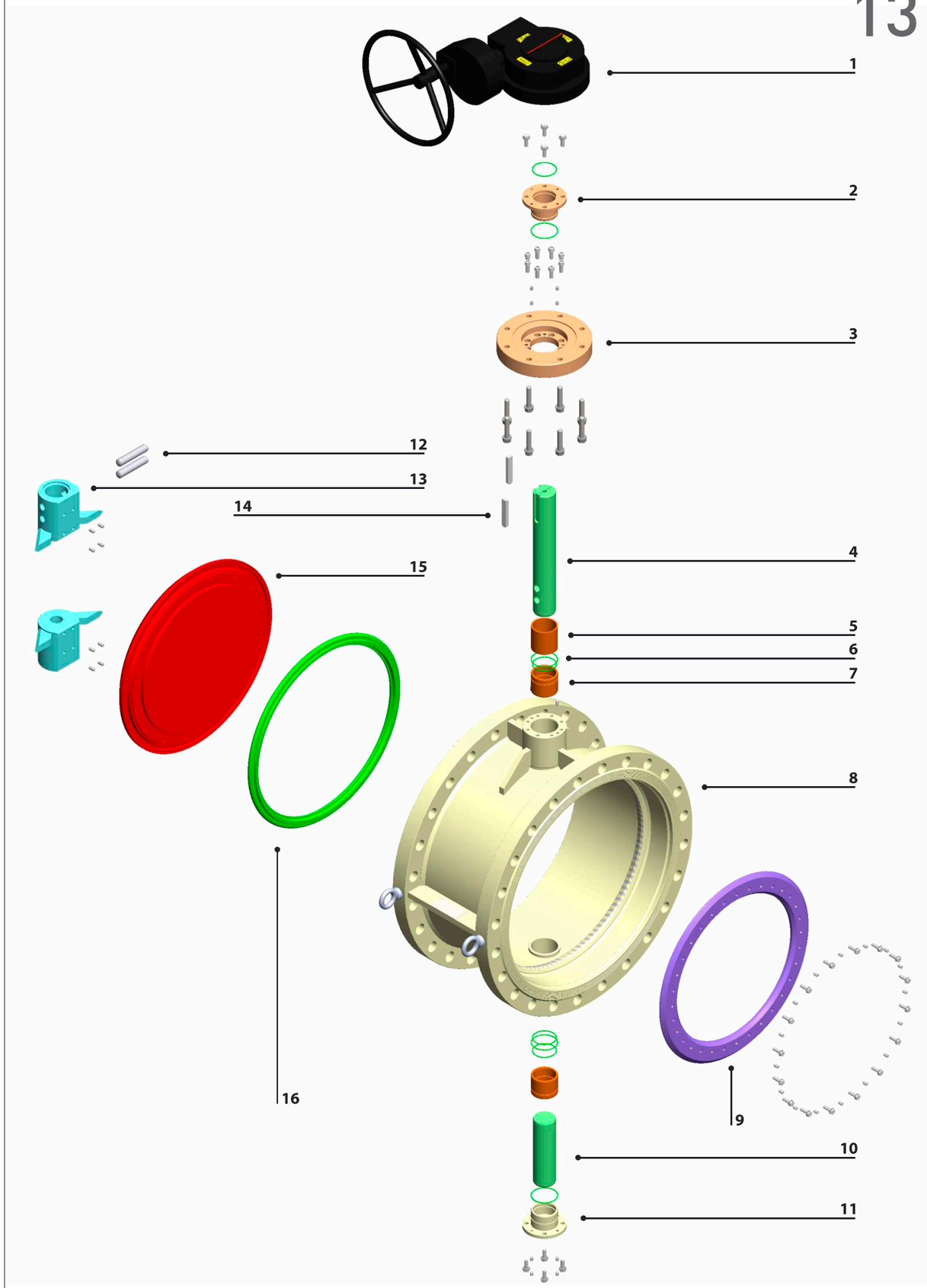

RS 900/903 technical data

01 **NOMINAL DIAMETER**	DN 50 ÷ DN 1200
02 **PRESSURE CLASS**	PN 16 ÷ PN 420 Class 150 ÷ Class 2500
03 **TIGHTNESS TEST**	Acc. to ISO 5208/ API 6D/ API 598/ EN 12266
04 **PROCESS CONNECTION**	• By means of flanges acc. to ASME B 16.5/ ASME B 16.47/ EN 1092 • By means of weld ends acc. to ASME B 16.25
05 **ACTUATOR ATTACHMENT FLANGE**	Acc. to ISO 5211
06 **CONSTRUCTIVE TYPE**	Acc. to ISO 14313 / ISO 10423 / API 6D / EN 17292 / EN 1983
07 **MATERIALS**	Acc. to EN / ASTM / AISI
08 **FACE-TO-FACE DIMENSIONS**	Acc. to EN 558 / API 6D
09 **WELDING**	Acc. to EN ISO 15614
10 **"FIRE-SAFE" DESIGN**	Acc. to API 6FA / API 607 / ISO 10497
11 **TEMPERATURE RANGE**	- 30 °C ÷ 120 °C
12 **WORKING MEDIUM TEMPERATURE**	- 20 °C ÷ 60 °C (upon request, - 50 °C ÷ 200 °C)
13 **WORKING MEDIUM**	Natural gases and other non-corosive fluids

RF 922 technical data

01 **NOMINAL DIAMETER**	Dn 150 ÷ DN 1400
02 **NOMINAL PRESSURE**	6/10/16/25 bar, Class 150
03 **INLET-OUTLET DIAMETER**	Equal flanges
04 **WORKING MEDIUM**	Natural gases and other non-corrosive fluids
05 **AMBIENT TEMPERATURE**	-30 °C ÷ 80 °C
06 **WORKING MEDIUM TEMPERATURE**	-20 °C ÷ 60 °C (upon request, - 50 °C ÷ 200 °C)
07 **BORE**	Full
08 **FLOWING DIRECTION**	Both ways
09 **BODY**	Two-flanged
10 **THROTTLE TYPE**	Eccentric
11 **OPENING ANGLE**	0 ° ÷ 90°
12 **PRIMARY SEALING**	NBR, HNBR, FPM, PTFE / coated carbon steel or steel
13 **LENGTH**	Acc. to EN 558-1; EN 558-2
14 **CONNECTION**	Flanges acc. to ISO 7005-1; EN 1092
15 **ACTUATOR ATTACHMENT**	Flanges acc. to ISO 5211

RS & RF

constructive details

According to customer specifications, TOTALGAZ INDUSTRIE uses the following types of sealing:

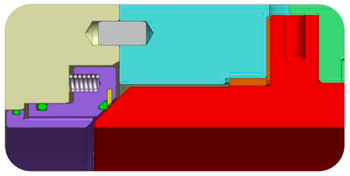

Soft Insert Seats

Soft insert seats are particularly suited for low pressure classes and normal working temperature. The soft insert seat enables the ring to be compressed and to adhere to the ball even in instances where the surface is rough. The Delta design ring and highly resistant material (HNBR, Viton, etc) allow the usage of soft insert seats for a wide range of pressures ((#150 - #900).

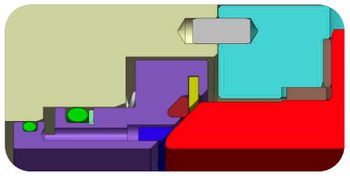

Soft Insert Seats + Scraper

Soft insert seats can have an additional ring: scraper ring. This type of sealing is used for higher pressure classes. In this case, the additional ring protects the soft insert seat. In case of higher pressures, the seat is pushed against the ball and the scraper ring absorbs the shock. As a secondary function, the scraper ring cleans the ball surface and prevents the soft insert from damage.

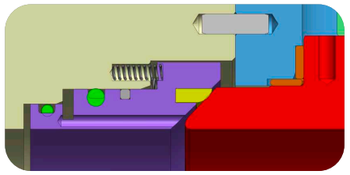

Hard Insert Seats

For higher pressure classes a hard insert seat is normally preferred. The hard insert seat is suitable for high pressure (i.e. #2500) and for temperature range between -150 °C and +250 °C. The materials - Nylon, Devlon, PTFE, Peek, PCTFE - are selected depending on the application (pressure, working temperature, type of fluid).

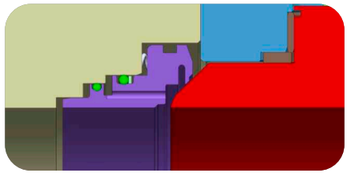

Metal-to-metal Seats

Metal-to-metal seats are normally preferred for applications with abrasive fluids. Also, this type of seat is used with corrosive fluids in combination with high temperatures and pressures. The ball surface and the seat ring are treated to increase the hardness, especially the ball hardness. Chrome carbide, tungsten carbide, stellite and silicon plating are all commonly applied surface treatments.

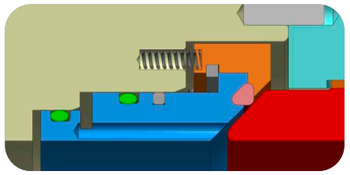

PMSS Seats

PMSS seat is a combination of soft insert seat and metal-to-metal seat. The operating principle: when the soft insert seat is damaged, the gas pressure forces the seat tightly against the ball, performing the metal-to-metal sealing.

Dual-Seat Seats

Sealing operation principle:

- the upstream springs and pressure act upon the interior seat (Figure A), forcing the Delta-ring gasket against the ball until achieving the primary sealing;
- as the Delta-ring wears, gas leaks occur; the resulting increased pressure and the action of the springs upon the exterior seat (Figure A) force the Delta-ring gasket against the ball until achieving the second sealing;
- as the Delta-ring of the exterior seat wears (Figure A), the springs and the gas leaks act upon the exterior seat (Figure B) achieving the third sealing.

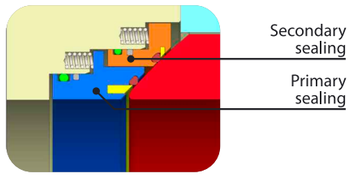

Fig. A

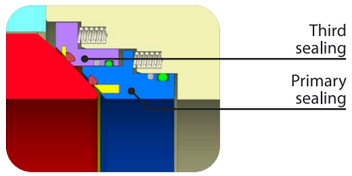

Fig. B

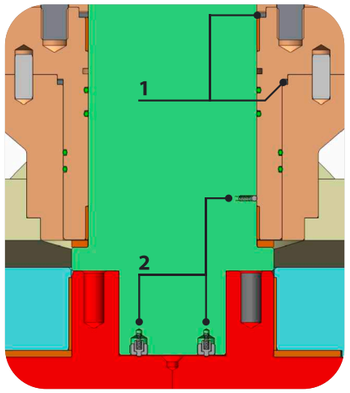

1 "Fire-safe" sealing
2 Anti-static

Anti blow-out stem / Anti-static

The design of the stem ensures safety measures to prevent stem blow-out due to inner pressure or faulty operator action.

All valves produced by Totalgaz Industrie comprise an anti-static device that ensures the electrical continuity with low mechanical resistance between the ball and valve body, respectively stem and body.

Upon request, the fire-safe valves can be provided with graphite gaskets for emergency cases.

Sealant injection

Upon request, the valves can be provided with injection fittings to inject sealant; this is recommended when the stem or seat O-ring are deteriorated, in order to obtain an emergency sealing.

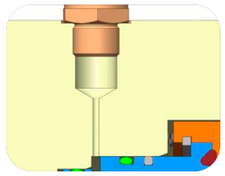

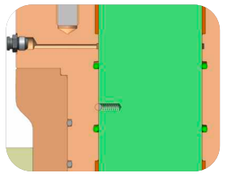

Double block and bleed

The design of the Totalgaz valves ensures the "double block and bleed" (DBB) function. In closed position, the valve provides a seal against pressure from both ends of the valve so that each seat seals on the ball and isolates the cavity between ball and body. The pressure in the cavity can be vented by means of the venting device.

1 Drain
2 Vent
3 Body
4 Stem
5 Pressure body
6 Pressure body
7 Ball in CLOSED position
8 Upstream seat
9 Downstream seat
10 Seat insertion
11 Seat insertion

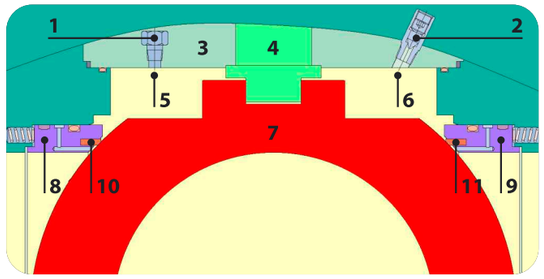

RS 900

dimensional details

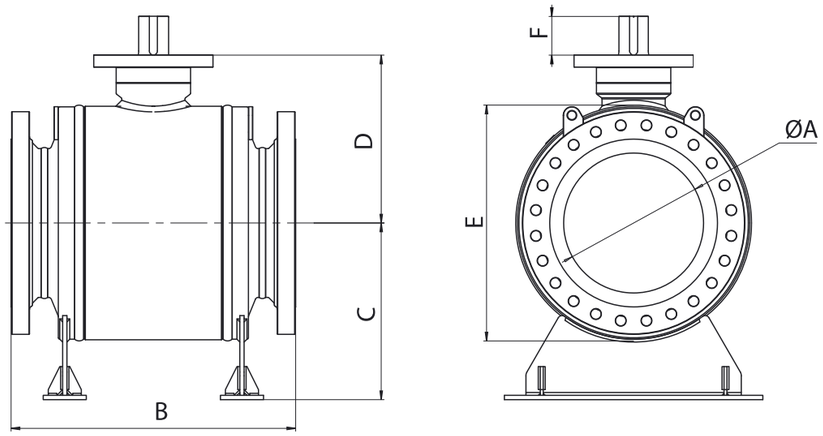

RS 900 PN 16; RS 900 PN 25 ; RS 900 CLASS 150 (PN 20)

DN		A	B			C	D	E	F	Breakaway torque	Weight	
			RF	WE	RTJ						WE	RF/RTJ
[mm]	[inch]	[mm]	[mm]	[mm]	[mm]	[mm]	[mm]	[mm]	[mm]	[Nm]	[Kg]	[Kg]
50	2"	49	178	216	191	81	111	157	40	90	16.15	23.1
80	3"	74	203	283	216	114	142	216	45	200	26.32	37.1
100	4"	100	229	305	241	138	162	241	50	350	46.5	67.41
150	6"	150	394	457	406	300	225	299	65	800	169.2	243.8
200	8"	201	457	521	470	358	261	362	65	1700	190	262.5
250	10"	252	533	559	546	376	301	459	65	2800	247	336
300	12"	303	610	635	622	414	351	545	65	4400	376	519.4
350	14"	334	686	762	699	465	380	580	90	6000	548.7	770.4
400	16"	385	762	838	775	503	421	665	90	9000	836.6	1144.8
500	20"	487	914	991	927	584	502	830	110	12600	1482	1932
600	24"	589	1067	1143	1080	665	580	980	175	20000	2460.5	3213
700	28"	684	1245	1345	*	745	663	1130	175	24000	3619	4780.6
800	32"	779	1372	1524	*	840	745	1290	200	28000	4929	6516.3
900	36"	874	1524	1727	*	904	934	1435	200	40000	6880.8	8798
1000	40"	976	*	*	*	993	911	1615	200	65000	9538	11812.5
1050	42"	1020	*	*	*	1032	975	1700	200	*	10934.5	13450.5
1200	48"	1166	*	*	*	1169	1132	1950	200	*	15566.4	19143.6

* Dimensions upon request • Flanges according to ASME B16.5 • Weld ends according to ASME B16.25

RS 900 PN 40; RS 900 CLASS 300 (PN 50)

DN		A	B			C	D	E	F	Breakaway torque	Weight	
			RF	WE	RTJ						WE	RF/RTJ
[mm]	[inch]	[mm]	[mm]	[mm]	[mm]	[mm]	[mm]	[mm]	[mm]	[Nm]	[Kg]	[Kg]
50	2"	49	216	216	232	81	111	157	40	170	18.05	25.2
80	3"	74	283	283	298	114	142	216	45	400	31.96	44.52
100	4"	100	305	305	321	138	162	241	50	650	63.24	90.95
150	6"	150	403	457	419	300	225	299	65	1600	178.6	254.4
200	8"	201	502	521	518	358	261	362	65	3200	199.5	273
250	10"	252	568	559	584	376	301	459	65	5400	266	357
300	12"	303	648	635	664	414	351	545	65	8400	394.8	540.6
350	14"	334	762	762	778	465	380	580	90	12000	576.6	813.2
400	16"	385	838	838	854	503	421	665	90	18000	883.6	1197.8
500	20"	487	991	991	1010	584	502	830	110	24000	1558	2037
600	24"	589	1143	1143	1165	665	580	980	175	40000	2593.5	3381
700	28"	684	1346	1346	1372	745	663	1130	175	48000	3807	5024.4
800	32"	779	1524	1524	1553	840	745	1290	200	63000	5180.1	6848
900	36"	874	1727	1727	1756	904	934	1435	200	82000	7238	9253.8
1000	40"	976	1884	1884	*	993	911	1615	200	125000	10032	12421.5
1050	42"	1020	*	*	*	1032	975	1700	200	*	11504.5	14154
1200	48"	1166	*	*	*	1169	1132	1950	200	*	16374.8	20140

*Dimensions upon request • Flanges according to ASME B16.5 • Weld ends according to ASME B16.25

RS 900 PN 63; RS 900 CLASS 400

DN		A	B			C	D	E	F	Breakaway torque	Weight	
			RF	WE	RTJ						WE	RF/RTJ
[mm]	[inch]	[mm]	[mm]	[mm]	[mm]	[mm]	[mm]	[mm]	[mm]	[Nm]	[Kg]	[Kg]
50	2"	49	*	*	*	83	108	160	40	240	19	26.25
80	3"	74	*	*	*	115	136	220	45	520	39.48	56.18
100	4"	100	406	406	410	141	163	245	55	840	70.68	101.65
150	6"	150	495	495	498	305	221	305	65	2200	206.8	296.8
200	8"	201	597	597	600	342	255	403	90	4200	228	315
250	10"	252	673	673	676	382	299	469	90	7000	304	409.5
300	12"	303	762	762	765	420	347	554	90	11000	451.2	625.4
350	14"	334	826	826	829	471	378	592	110	15600	669.6	930.9
400	16"	385	902	902	905	514	422	681	110	23000	1015.2	1378
500	20"	487	1054	1054	1060	592	497	844	175	32000	1786	2331
600	24"	589	1232	1232	1241	680	581	1002	200	52000	2365.5	3874.5
700	28"	684	1397	1397	1410	762	667	1155	200	62000	4371	5777
800	32"	779	1651	1651	1667	855	742	1314	200	82000	5952	7864.5
900	36"	874	1880	1880	1895	920	828	1468	200	106000	8309.6	10631.8
1000	40"	976	*	*	*	1010	912	1648	240	*	11523.5	14259
1050	42"	1020	*	*	*	1050	977	1742	240	*	13205	16243.5
1200	48"	1166	*	*	*	1195	1136	2002	240	*	18800	23118.6

*Dimensions upon request • Flanges according to ASME B16.5 • Weld ends according to ASME B16.25

RS 900 PN 100; RS 900 CLASS 600

DN		A	B			C	D	E	F	Breakaway torque	Weight	
			RF	WE	RTJ						WE	RF/RTJ
[mm]	[inch]	[mm]	[mm]	[mm]	[mm]	[mm]	[mm]	[mm]	[mm]	[Nm]	[Kg]	[Kg]
50	2"	49	292	292	295	82	112	170	40	300	19.95	25.65
80	3"	74	356	356	359	117	175	231	45	680	46.06	58.28
100	4"	100	432	432	435	142	185	255	55	1100	88.35	110.67
150	6"	150	559	559	562	307	205	325	65	2800	225.6	282
200	8"	201	660	660	664	342	245	421	90	5800	247	304
250	10"	252	787	787	791	383	301	492	90	9000	323	399
300	12"	303	838	838	841	422	352	675	90	14000	488.8	592.2
350	14"	334	889	889	892	470	375	612	110	20200	716.1	864.9
400	16"	385	991	991	994	510	418	701	110	30400	1090.4	1316
500	20"	487	1194	1194	1200	608	495	875	175	42000	1919	2270.5
600	24"	589	1397	1397	1407	695	582	1032	200	68000	3201.5	3771.5
700	28"	684	1549	1549	1562	781	678	1182	200	80000	4700	5508.4
800	32"	779	1778	1778	1794	875	745	1342	240	104000	6398.4	7356.3
900	36"	874	2083	2083	2099	942	812	1492	240	140000	8930	10133.2
1000	40"	976	*	*	-	1035	899	1682	240	*	12388	13870
1050	42"	1020	*	*	-	1075	967	1775	240	*	14202.5	15808
1200	48"	1166	*	*	-	1225	1123	2035	240	*	20210	22052.4

*Dimensions upon request • Flanges according to ASME B16.5 • Weld ends according to ASME B16.25

RS 900 PN 150; RS 900 CLASS 900

DN		A	B			C	D	E	F	Breakaway torque	Weight	
			RF	WE	RTJ						WE	RF/RTJ
[mm]	[inch]	[mm]	[mm]	[mm]	[mm]	[mm]	[mm]	[mm]	[mm]	[Nm]	[Kg]	[Kg]
50	2"	49	368	368	371	85	123	184	55	360	38	52.5
80	3"	74	381	381	384	117	165	252	55	950	57.34	81.62
100	4"	100	457	457	460	141	204	282	55	2000	99.51	143.38
150	6"	150	610	610	613	236	255	357	90	4500	272.6	384.78
200	8"	201	737	737	740	275	290	440	90	9000	299.25	406.35
250	10"	252	838	838	841	329	334	537	110	15000	390.45	533.4
300	12"	303	965	965	968	368	387	636	110	20000	591.26	807.72
350	14"	315	1029	1029	1038	419	418	727	110	31000	866.76	1203.75
400	16"	373	1130	1130	1140	468	455	818	175	50000	1319.76	1795.64
500	20"	471	1321	1321	1334	561	557	967	200	70000	2321.8	3036.6
600	24"	570	1549	1549	1568	664	650	1167	200	94000	3874.1	5044.2
700	28"	665	*	*	*	753	750	1366	240	120000	5687	7516.46
800	32"	760	*	*	*	847	867	1563	240	150000	7742.25	10240.97
900	36"	855	2286	*	2315	958	936	1733	270	200000	10805.3	13826.64

*Dimensions upon request • Flanges according to ASME B16.5 • Weld ends according to ASME B16.25

RS 900 dimensional details

RS 900 PN 250; RS 900 CLASS 1500

DN		A	B			C	D	E	F	Breakaway torque	Weight	
			RF	WE	RTJ						WE	RF/RTJ
[mm]	[inch]	[mm]	[mm]	[mm]	[mm]	[mm]	[mm]	[mm]	[mm]	[Nm]	[Kg]	[Kg]
50	2"	49	368	368	371	103	123	211	55	600	42.75	59.85
80	3"	74	470	470	473	147	165	224	55	1800	83.66	118.72
100	4"	100	546	546	549	174	204	313	55	3400	141.36	203.3
150	6"	144	705	705	711	302	296	403	90	9000	327.12	461.1
200	8"	192	832	832	841	352	343	510	110	18000	358.15	487.2
250	10"	239	991	991	1000	419	411	621	110	34000	468.35	639.45
300	12"	287	1130	1130	1146	468	447	722	110	45000	708.76	968.84
350	14"	322	1257	1257	1276	535	533	809	175	64000	1038.81	1443.43
400	16"	360	1384	1384	1407	603	593	925	175	80000	1581.08	2151.8

*Dimensions upon request • Flanges according to ASME B16.5 • Weld ends according to ASME B16.25

RS 900 PN 420; RS 900 CLASS 2500

DN		A	B			C	D	E	F	Breakaway torque	Weight	
			RF	WE	RTJ						WE	RF/RTJ
[mm]	[inch]	[mm]	[mm]	[mm]	[mm]	[mm]	[mm]	[mm]	[mm]	[Nm]	[Kg]	[Kg]
50	2"	44	451	451	454	105	168	210	60	1800	71.82	101
80	3"	64	578	578	584	132	192	265	60	3600	144	204
100	4"	89	673	673	683	186	284	396	70	7600	233	335
150	6"	131	914	914	927	221	307	456	120	15000	579	816
200	8"	181	1022	1022	1038	366	413	693	145	30000	580	789
250	10"	225	1270	1270	1292	413	488	830	145	55000	852	1164
300	12"	267	1422	1422	1445	470	552	922	145	88000	1127	1540

*Dimensions upon request • Flanges according to ASME B16.5 • Weld ends according to ASME B16.25

RS 903 dimensional details

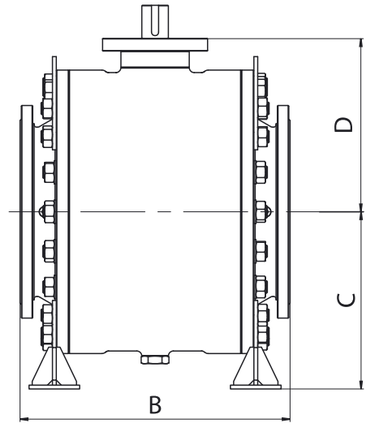

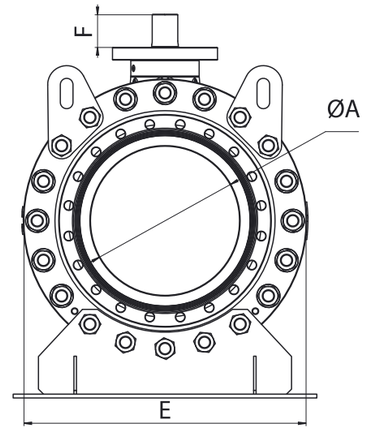

RS 903 PN 16; RS 903 PN 25; RS 903 CLASS 150 (PN 20)

DN		A	B		C	D	E	F	Breakaway torque	Weight
			RF	RTJ						RF/RTJ
[mm]	[inch]	[mm]	[mm]	[mm]	[mm]	[mm]	[mm]	[mm]	[Nm]	[Kg]
50	2"	49	178	191	100	124	150	22	90	24.15
80	3"	74	203	216	122	152	209	28	200	45.58
100	4"	100	229	241	144	180	255	28	350	70.62
150	6"	150	394	406	284	239	320	65	800	250.16
200	8"	201	457	470	323	274	417	65	1700	405.3
250	10"	252	533	546	359	316	487	65	2800	595.35
300	12"	303	610	622	391	372	582	65	4400	836.34
350	14"	334	686	699	434	407	625	90	6000	1048.6
400	16"	385	762	775	475	446	710	90	9000	1235.96
500	20"	487	914	927	558	527	877	110	12600	2310
600	24"	589	1067	1080	637	601	1037	175	20000	3429.3
700	28"	684	1245	*	708	696	1205	175	24000	5020.16
800	32"	779	1372	*	786	789	1386	200	28000	6897.22
900	36"	874	1524	*	854	871	1527	200	40000	8361.28
1000	40"	976	*	*	950	950	1704	200	65000	12311.25
1050	42"	1020	*	*	983	1016	1797	200	*	14506.8
1200	48″	1166	*	*	1107	1195	2087	200	*	20347.76

*Dimensions upon request • Flanges according to ASME B16.5 • Weld ends according to ASME B16.25

RS 903 PN 40; RS 903 CLASS 300 (PN 50)

DN		A	B		C	D	E	F	Breakaway torque	Weight
			RF	RTJ						RF/RTJ
[mm]	[inch]	[mm]	[mm]	[mm]	[mm]	[mm]	[mm]	[mm]	[Nm]	[Kg]
50	2"	49	216	232	100	124	136	22	170	24.15
80	3"	74	283	298	122	152	185	28	400	56.18
100	4"	100	305	321	144	180	221	28	650	82.39
150	6"	150	403	419	284	239	287	65	1600	263.94
200	8"	201	502	518	323	274	383	65	3200	418.95
250	10"	252	568	584	359	316	444	90	5400	628.95
300	12"	303	648	664	391	372	519	90	8400	864.96
350	14"	334	762	778	434	407	550	110	12000	1102.1
400	16"	385	838	854	475	446	638	110	18000	1288.96
500	20"	487	991	1010	519	450	803	175	24000	2424.45
600	24"	589	1143	1165	558	601	947	175	40000	3600.45
700	28"	684	1346	1372	630	696	1080	200	48000	5255.48
800	32"	779	1524	1553	700	789	1216	200	63000	7232.13
900	36"	874	1727	1756	794	871	1370	200	82000	10217.34
1000	40"	976	1884	*	863	950	1556	200	125000	12921.3
1050	42"	1020	*	*	950	1016	1644	240	*	15221.85
1200	48″	1166	*	*	1107	1195	1869	240	*	21367.48

*Dimensions upon request • Flanges according to ASME B16.5 • Weld ends according to ASME B16.25

RS 900/903

dimensional details

RS 903 PN 63; RS 903 CLASS 400

DN		A	B		C	D	E	F	Breakaway torque	Weight
			RF	RTJ						RF/RTJ
[mm]	[inch]	[mm]	[mm]	[mm]	[mm]	[mm]	[mm]	[mm]	[Nm]	[Kg]
50	2"	49	*	*	100	124	136	30	240	26.25
80	3"	74	*	*	122	152	185	40	520	56.18
100	4"	100	406	410	144	180	221	40	840	101.65
150	6"	150	495	498	290	234	290	65	2200	293.62
200	8"	201	597	600	329	268	386	90	4200	480.9
250	10"	252	673	676	368	314	449	90	7000	709.8
300	12"	303	762	765	400	368	525	90	11000	995.34
350	14"	334	826	829	443	404	555	110	15600	1247.62
400	16"	385	902	905	487	447	645	110	23000	1480.82
500	20"	487	1054	1060	567	517	808	175	32000	2781.45
600	24"	589	1232	1241	649	601	957	200	52000	4124.4
700	28"	684	1397	1410	722	696	1089	200	62000	6048.36
800	32"	779	1651	1667	801	789	1229	200	82000	8309.62
900	36"	874	1880	1895	871	871	1385	200	106000	11741.62
1000	40"	976	*	*	968	950	1571	240	*	14844.9
1050	42"	1020	*	*	1001	1016	1659	240	*	17512.95
1200	48″	1166	*	*	1131	1195	1869	240	*	24569.74

*Dimensions upon request • Flanges according to ASME B16.5 • Weld ends according to ASME B16.25

RS 903 PN 100; RS 903 CLASS 600

DN		A	B		C	D	E	F	Breakaway torque	Weight
			RF	RTJ						RF/RTJ
[mm]	[inch]	[mm]	[mm]	[mm]	[mm]	[mm]	[mm]	[mm]	[Nm]	[Kg]
50	2"	49	292	295	100	124	136	55	300	26.6
80	3"	74	356	359	122	152	185	55	680	55.46
100	4"	100	432	435	144	180	221	55	1100	141.36
150	6"	150	559	562	292	217	292	65	2800	289.52
200	8"	201	660	664	332	257	390	90	5800	475
250	10"	252	787	791	371	316	456	90	9000	702.05
300	12"	303	838	841	403	373	531	90	14000	968.2
350	14"	334	889	892	446	401	561	110	20200	1177.38
400	16"	385	991	994	490	443	650	110	30400	1428.8
500	20"	487	1194	1200	573	517	818	175	42000	2732.2
600	24"	589	1397	1407	655	601	968	200	68000	4063.15
700	28"	684	1549	1562	729	696	1102	200	80000	5837.4
800	32"	779	1778	1794	809	789	1241	240	104000	7876.17
900	36"	874	2083	2099	881	871	1397	240	140000	11354.26
1000	40"	976	*	*	978	950	1589	240	*	14647.1
1050	42"	1020	*	*	1014	1016	1677	240	*	17266.25
1200	48″	1166	*	*	1143	1195	1907	240	*	23740.64

*Dimensions upon request • Flanges according to ASME B16.5 • Weld ends according to ASME B16.25

RS 903 PN 150; RS 903 CLASS 900

DN		A	B		C	D	E	F	Breakaway torque	Weight
			RF	RTJ						RF/RTJ
[mm]	[inch]	[mm]	[mm]	[mm]	[mm]	[mm]	[mm]	[mm]	[Nm]	[Kg]
50	2"	49	368	371	108	130	170	55	360	61.95
80	3"	74	381	384	134	165	226	55	950	115.54
100	4"	100	457	460	163	204	333	55	2000	193.67
150	6"	150	610	613	236	255	357	90	4500	409.16
200	8"	201	737	740	275	290	440	90	9000	672
250	10"	252	838	841	329	334	537	110	15000	1004.85
300	12"	303	965	968	368	387	636	110	20000	1408.74
350	14"	315	1029	1038	419	418	727	110	31000	1751.59
400	16"	373	1130	1140	469	455	818	175	50000	2096.68
500	20"	471	1321	1334	561	557	967	200	70000	3924.9
600	24"	570	1549	1568	664	650	1167	240	94000	5834.85
700	28"	665	*	*	761	750	1366	240	120000	8553.14
800	32"	760	*	*	847	867	1563	240	150000	11770
900	36"	855	2286	2315	958	936	1733	275	200000	16640.94

*Dimensions upon request • Flanges according to ASME B16.5 • Weld ends according to ASME B16.25

RS 903 PN 250; RS 903 CLASS 1500

DN		A	B		C	D	E	F	Breakaway torque	Weight
			RF	RTJ						RF/RTJ
[mm]	[inch]	[mm]	[mm]	[mm]	[mm]	[mm]	[mm]	[mm]	[Nm]	[Kg]
50	2"	49	368	371	108	130	154	55	600	61.95
80	3"	74	470	473	134	165	200	55	1800	115.54
100	4"	100	546	549	163	204	289	55	3400	193.67
150	6"	144	705	711	302	296	403	90	9000	485.48
200	8"	192	832	841	353	343	510	110	18000	794.85
250	10"	239	991	1000	419	411	621	110	34000	1205.4
300	12"	287	1130	1146	469	447	722	110	45000	1706.6
350	14"	322	1257	1276	535	534	809	175	64000	2097.2
400	16"	360	1384	1407	603	593	925	175	80000	2510.08

*Dimensions upon request • Flanges according to ASME B16.5• Weld ends according to ASME B16.25

RS 903 PN 420; RS 903 CLASS 2500

DN		A	B		C	D	E	F	Breakaway torque	Weight
			RF	RTJ						RF/RTJ
[mm]	[inch]	[mm]	[mm]	[mm]	[mm]	[mm]	[mm]	[mm]	[Nm]	[Kg]
50	2"	44	451	454	105	167	210	60	1800	124
80	3"	64	578	584	132	192	266	60	3600	231
100	4"	89	673	683	233	214	398	70	7600	383
150	6"	131	914	927	272	249	455	120	15000	793
200	8"	181	1022	1038	365	414	693	145	30000	2067
250	10"	225	1270	1292	413	487	830	145	55000	3138
300	12"	267	1422	1445	469	552	922	145	88000	4376

*Dimensions upon request • Flanges according to ASME B16.5 • Weld ends according to ASME B16.25

RF 922

dimensional details

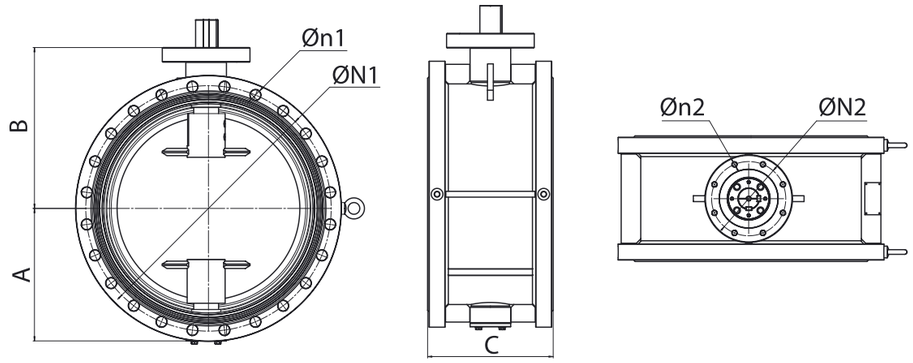

RF 922 PN 6, PN 10, PN 16, PN 25; CLASS 150 (PN 20)

DN		Dimensions						
		A	B	C	N1	n1	N2	n2
[mm]	[inch]	[mm]	[mm]	[mm]	[mm]	[mm]	[mm]	[mm]
150	-	115	185	210	240	22	102	11
200	-	150	216	230	295	22	102	11
250	-	180	260	250	355	26	125	13
300	-	215	275	270	410	26	125	13
350	-	240	335	290	470	26	140	18
400	-	290	367	310	525	29.5	140	18
450	-	305	385	330	585	29.5	165	22
500	-	360	440	350	650	32.5	165	22
600	-	415	510	390	770	35.5	254	18
700	-	470	575	730	840	35.5	254	18
800	-	525	630	470	950	39	254	18
900	-	575	725	510	1050	39	350	22
1400	-	640	785	550	1170	42	350	22

RS 900/903

ordering code

1	2	3	4	5	6	7	8	9	10	11
Valve type	Model	Dimension	Nominal pressure	Body material	Ball material	Gasket type	Gasket material	Connecting flange	Actuator	Special requirements
RS 900 RS 903	T	050 080 100 150 200 250 300 350 400 500 600 700 800 900 1000 1050 1200	A3 A4 A5 A6 A7 A8 A9 A10 B1 B2 B3 B4 B5 B6 B7	C2 C3 C4 C5 C6 C7 C8	01 02 05 06 07 08 09 10	E1 E2 E3 E4 E5 E6	S1 S2 S3 S4 S5 S6 S7 S8 S9	F1 F2 F3 F4	H G AE P AH	00 01 02

1. Valve type
RS 900 – fully welded ball valve
RS 903 – detachable ball valve

2. Model
T – trunnion ball

3. Dimension
050 – DN50
080 – DN80
100 – DN100
150 – DN150
200 – DN200
250 – DN250
300 – DN300
350 – DN350
400 – DN400
500 – DN500
600 – DN600
700 – DN700
800 – DN800
900 – DN900
1000 – DN1000
1050 – DN1050
1200 – DN1200

4. Nominal pressure
A3 – PN16
A4 – PN25
A5 – PN40
A6 – PN64
A7 – PN100
A8 – PN150
A9 – PN250
A10 – PN420
B1 – class 150
B2 – class 300
B3 – class 400
B4 – class 600
B5 – class 900
B6 – class 1500
B7 – class 2500

5. Body material
C2 – WCB
C3 – P265NL1
C4 – C22
C5 – A106
C6 – A350 LF2
C7 – A352 LCB
C8 - P355 GH

6. Ball material
01 – AISI 304
02 – AISI 316
05 – A350 LF 2+ENP
06 – A105+ENP
07 – F6a
08 – F6a+ tungsten carbide
09 – F6a+ chrome carbide
10 – F6a+ silicone plating

7. Gasket type
E1 – Soft insert
E2 – Soft insert + scraper
E3 – Hard insert
E4 – Metal to metal
E5 – PMSS
E6 – Dual seat

8. Gasket material
S1 – NBR
S2 – HNBR
S3 – EPDM
S4 – Devlon
S5 – PTFE
S6 – Peek
S7 – F6a+ tungsten carbide
S8 – F6a+ chrome carbide
S9 – F6a+ silicone plating
S10 - Viton
S11 - A350 Lf2 + ENP + HVOF

9. Connecting flange
F1 – Flange RF – EN 1092
F2 – Flange RF – ASME B16.5
F3 – Flange RTJ – ASME B16.5
F4 – BW – ASME B16.25

10. Actuator
H – Lever
G – Manual gear box
AE – Electrical actuator
P – Pneumatic actuator
AH – Hydraulic actuator

11. Special requirements
00 – No special requirements
01 – Special coating
02 – Installation underground

EXAMPLE										
RS 900	T	500	B2	C6	09	E4	S8	F4	AE	02

Valve **RS 900-T-500-B2-C6-09-E4-S8-F4-AE-02** = fully welded trunnion mounted ball valve, DN 500, pressure class 300, body material A 350 LF2, ball material F6a + chrome carbide, metal-to-metal sealing, gasket material F6a + chrome carbide, with weld ends, electrically actuated, installation under ground.