TOTALGAZ
INDUSTRIE

GAS SHUT-OFF VALVE SB 770

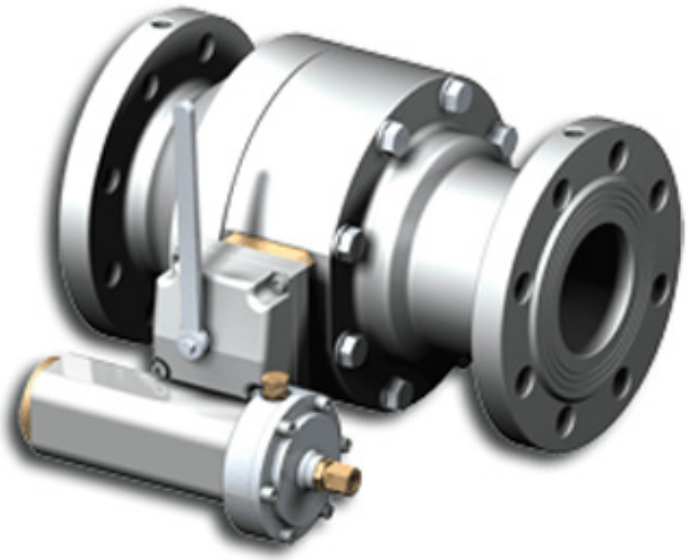

Introduction

The SB 770 is a shut-off valve with self-operation and manual resetting, suitable for transport and distribution networks of air, natural gases, LPG, carbon dioxide (CO_2) and other non-corrosive gaseous media.

The SB 770 is a safety device which has the role of preventing an increase or decrease in the working pressure outside the operating range for which it was designed.

Its design ensures several advantages, such us:

- easy maintenance without removing the valve from installation;
- manual resetting, whenever necessary;
- its mechanism can be mounted on any type of RTG regulator.

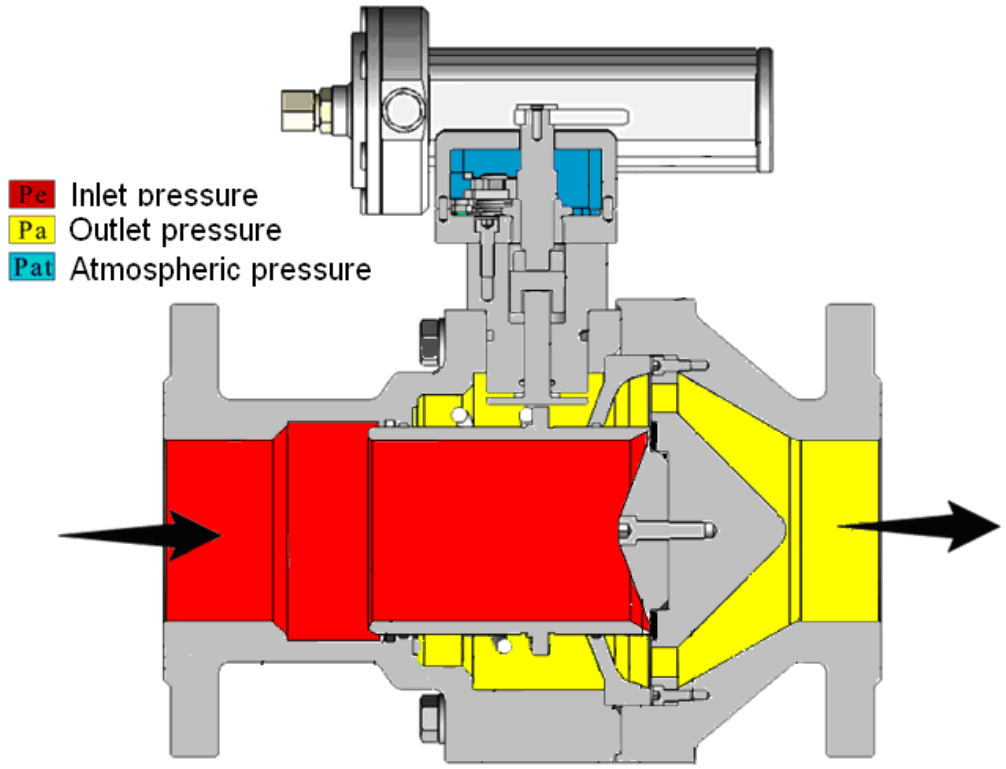

Figure 1

1. Gas inlet; 2. Piston; 3. Piston spring; 4. Guide ring; 5. Deflector; 6. Seat; 7. Gas outlet; 8. Arming rod; 9. Cam sleeve; 10. Rod

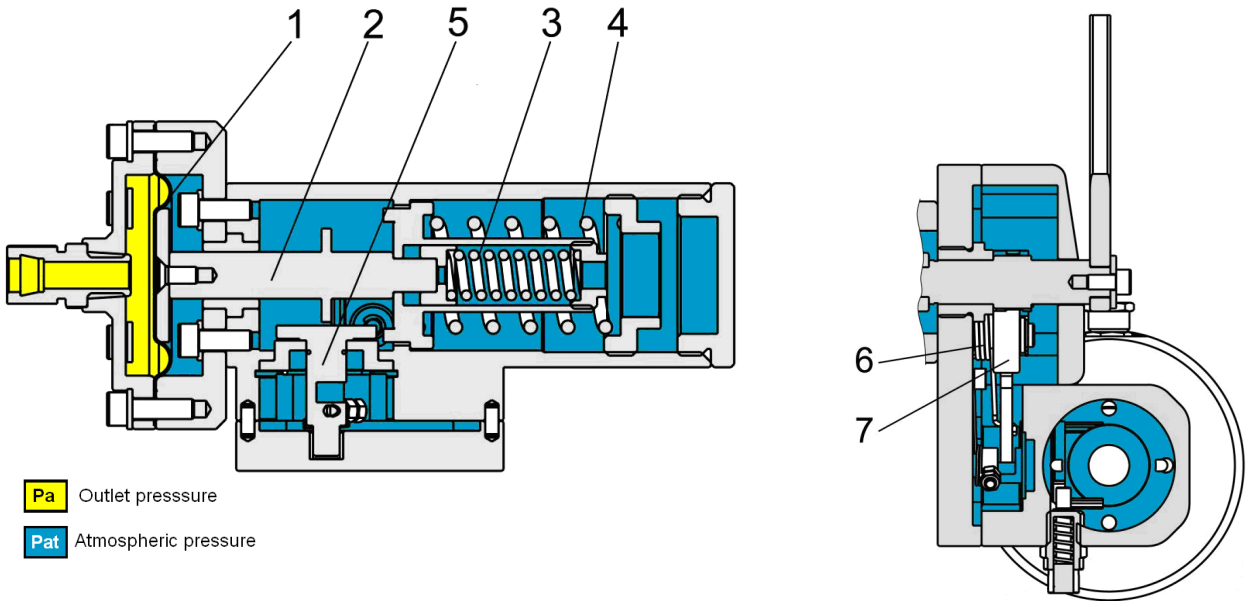

Figure 2

1. Servomotor diaphragm; 2. Diaphragm rod; 3. Minimum spring; 4. Maximum spring; 5. Fork; 6. Cam spring; 7. Cam

Operation of SB 770 shut-off valve

The SB 770 valve working position is normally open. Its operation is based on overcoming the force exerted by the springs mounted in the SB 75 control device (figure 3) when the line pressure exceeds the set values (underpressure and/or overpressure). The operating mechanism of the SB 770 is common both for the independent variant and the RTG 420 axial regulator with incorporated shut-off valve.

The servomotor of the operating mechanism can be equipped with a control diaphragm or a piston depending on the pressure monitored. There are six types of servomotors covering different pressure ranges, listed in table 1.

Table 1

Servomotor	Intervention limits [bar]	
	Underpressure	Overpressur
SM 70	0.03 ÷ 2.9	0.02 ÷ 3.85
SM 50	0.06 ÷ 5.6	0.27 ÷ 7.6
SM 37	0.2 ÷ 12.4	2.04 ÷ 15.4
SM 25	1.4 ÷ 22.4	15.1 ÷ 30.2
SM 20	1.3 ÷ 34.9	12.0 ÷ 47.2
SM 15	2.4 ÷ 62.1	21.3 ÷ 83.3

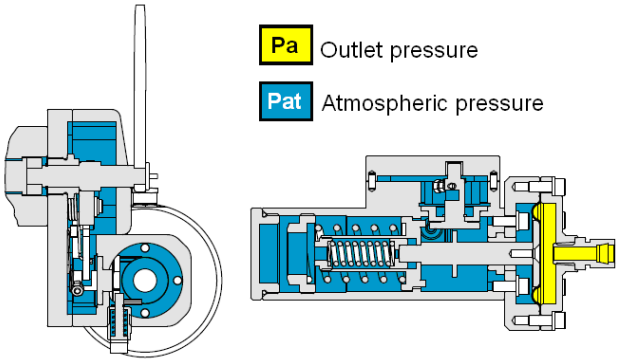

Figure 3 - SB 75 control device

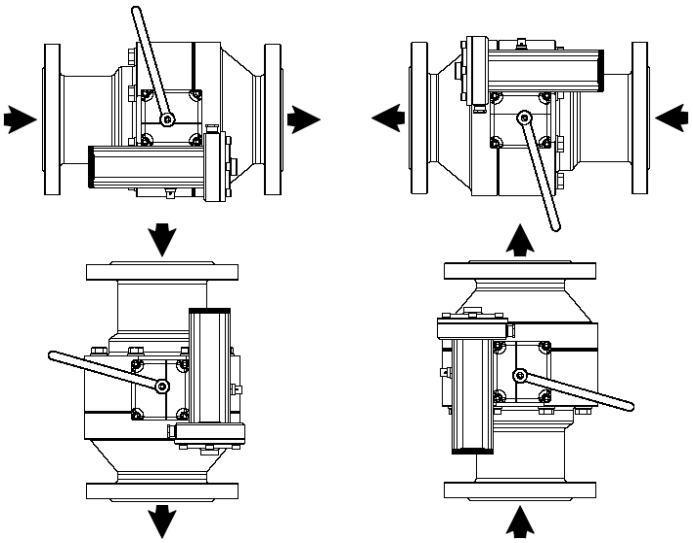

Figure 4 – SB 770 assembly positions

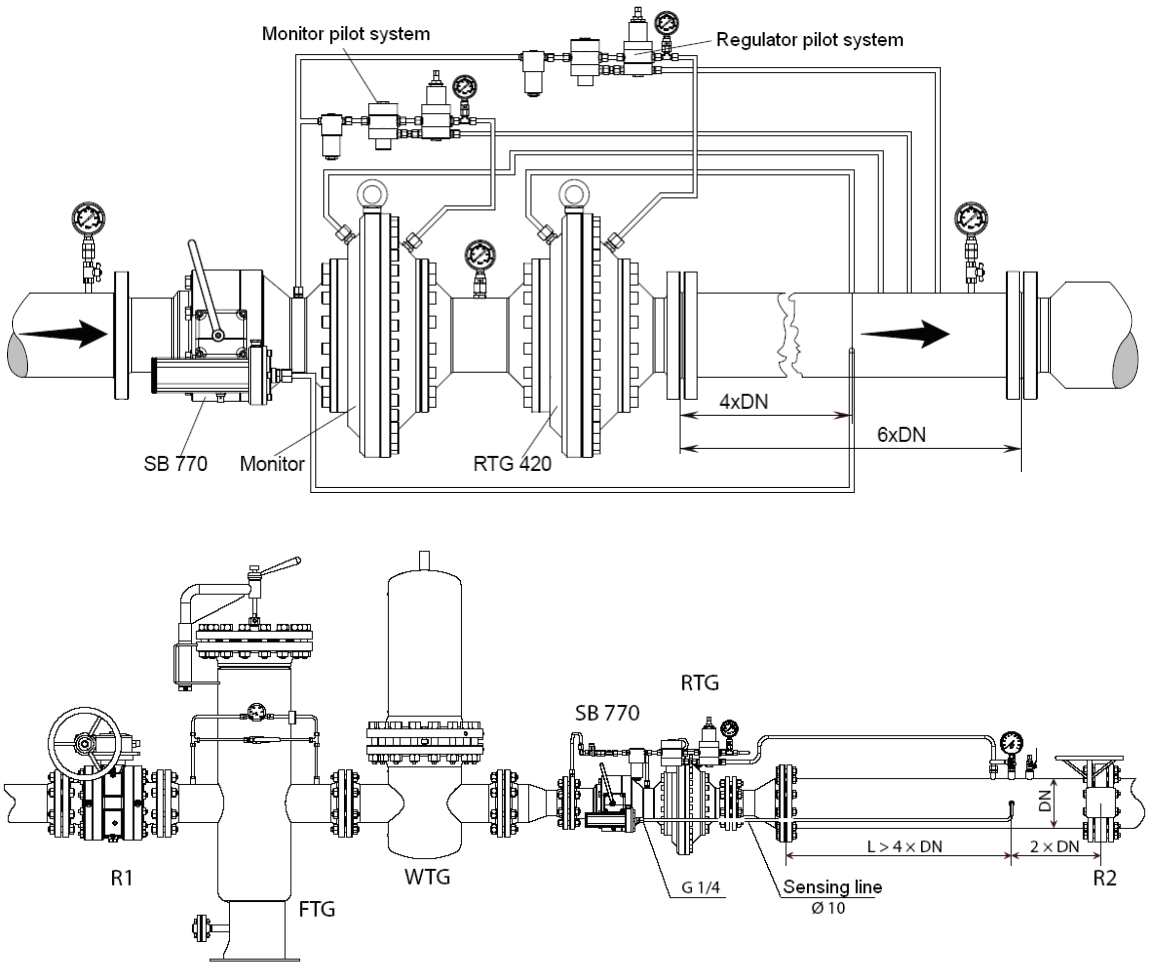

Figure 5 – Examples of SB 770 shut-off installation

Technical characteristics

Table 2 – Technical characteristics of the SB 770 shut-off valve

Nominal pressure [bar]	16 / 25 / 40 / 64 / 100
Intervention for minimum pressure [bar]	0.015 ÷ 50
Intervention for maximum pressure [bar]	0.08 ÷ 75
Intervention accuracy (AG)	±1/5 %
Connection type: equal flanges (PN)	16 / 25 / 40 / 64 /100
Ambient temperature [^{o}C]	-20 ÷ 80 (optionally, -30 ÷ 80)
Working fluid temperature [^{o}C]	-10 ÷ 60 (optionally, -20 ÷ 60)
Working medium	air, natural gases, LPG and other non-corrosive gaseous media
Response period [sec]	≤ 1
Reference standard	SR EN 14382

Materials

Table 3

Part	Material
Bodies	ASTM A216 WCB, A352 LCB
Seat	AISI 316
Rod	AISI 316
Servomotor	S375J2, S355J2
Internal parts	Cu-Zn alloy, Al alloy, Stainless Steel
Valve plate	Rubber (NBR), polyurethane
Diaphragm	Rubber (NBR) with textile insert
O-rings	Rubber (NBR), Viton
Sensing lines	AISI 304L

TOTALGAZ INDUSTRIE

Adjustment springs

The table below lists the springs used for the SB 770 shut-off valve corresponding to various setting ranges.

Table 4 – Adjustment springs for the SB 75 control mechanism

Servomotor type	Minimum spring		Maximum spring	
	Code	Adjustment range [bar]	Code	Adjustment range [bar]
SM 15	1450353	2.4 ÷ 4.8	1450367	21.3 ÷ 42.7
	1450354	4.1 ÷ 8.3	1450368	41.9 ÷ 83.8
	1450355	8.0 ÷ 15.6		
	1450358	9.0 ÷ 18.2		
	1450359	17.8 ÷ 35.7		
	1450360	34.9 ÷ 62.1		
SM 20	1450353	1.3 ÷ 2.7	1450367	12.0 ÷ 24.0
	1450354	2.3 ÷ 4.6	1450368	23.5 ÷ 47.2
	1450355	4.5 ÷ 8.7		
	1450358	5.1 ÷ 10.2		
	1450359	10.0 ÷ 20.1		
	1450360	19.6 ÷ 34.9		
SM 25	1450354	1.4 ÷ 3.0	1450368	15.1 ÷ 30.2
	1450355	2.9 ÷ 5.6		
	1450359	6.4 ÷ 12.8		
	1450360	12.5 ÷ 22.4		
SM 37	1450352	0.2 ÷ 0.5	1450366	2.04 ÷ 4.1
	1450353	0.4 ÷ 0.9	1450367	3.9 ÷ 7.8
	1450354	0.7 ÷ 1.5	1450368	7.6 ÷ 15.4
	1450355	1.4 ÷ 2.9		
	1450358	1.6 ÷ 3.3		
	1450359	3.2 ÷ 6.5		
	1450360	6.4 ÷ 12.4		
SM 50	1450351	0.06 ÷ 0.14	1450364	0.27 ÷ 0.55
	1450352	0.12 ÷ 0.25	1450365	0.53 ÷ 1.07
	1450353	0.21 ÷ 0.44	1450366	1.0 ÷ 2.0
	1450354	0.37 ÷ 0.75	1450367	1.9 ÷ 3.8
	1450355	0.72 ÷ 1.40	1450368	3.7 ÷ 7.6
	1450356	0.21 ÷ 0.43		
	1450357	0.42 ÷ 0.85		
	1450358	0.81 ÷ 1.63		
	1450359	1.60 ÷ 3.20		
	1450360	3.13 ÷ 5.60		
SM 70	1450351	0.03 ÷ 0.08	1450361	0.02 ÷ 0.04
	1450352	0.06 ÷ 0.1	1450362	0.03 ÷ 0.08
	1450353	0.1 ÷ 0.2	1450363	0.06 ÷ 0.14
	1450354	0.1 ÷ 0.4	1450364	0.13 ÷ 0.28
	1450355	0.3 ÷ 0.7	1450365	0.27 ÷ 0.55
	1450356	0.1 ÷ 0.2	1450366	0.51 ÷ 1.02
	1450357	0.2 ÷ 0.5	1450367	0.98 ÷ 1.95
	1450358	0.4 ÷ 0.8	1450368	1.92 ÷ 3.85
	1450359	0.8 ÷ 1.7		
	1450360	1.6 ÷ 2.9		

Dimensional characteristics

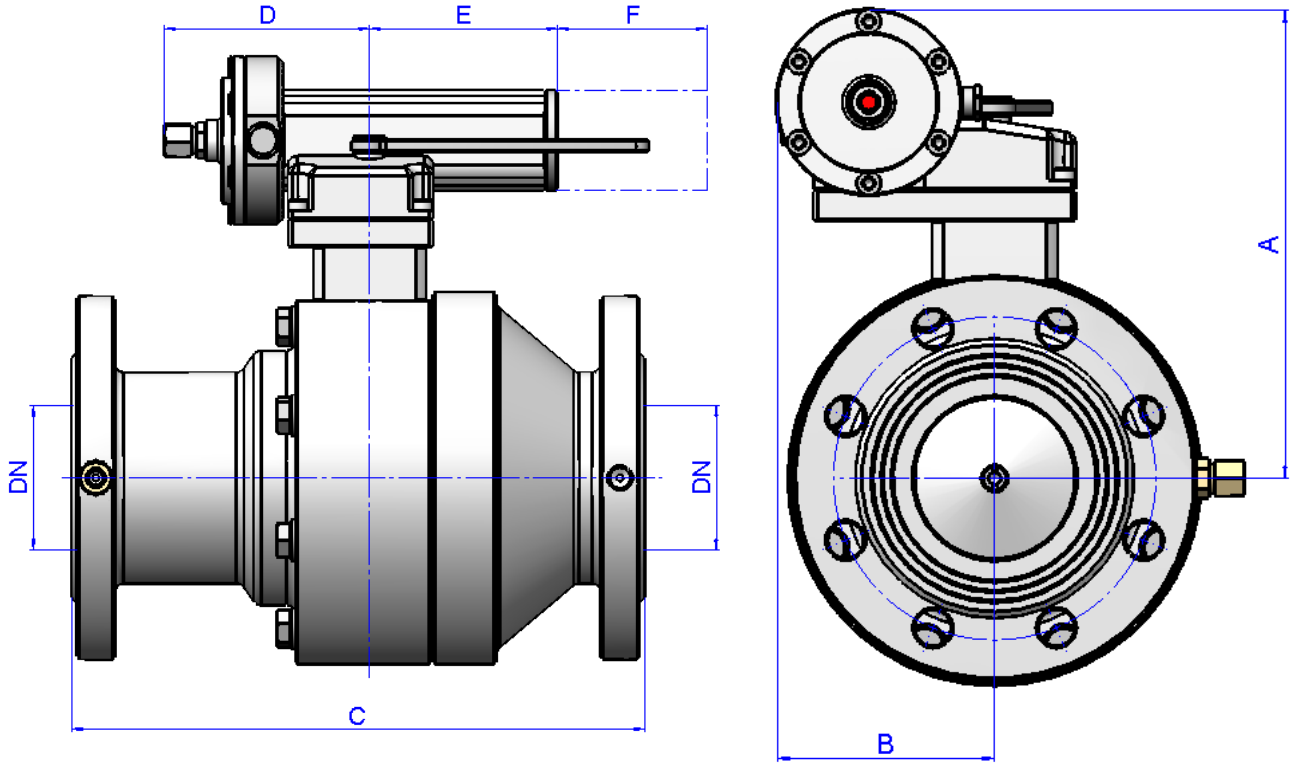

Figure 6 – Overall dimensions of SB 770

Table 5 – Overall dimensions of SB 770

DN		A	B	C [mm]			D	E	F
[mm]	[inch]	[mm]	[mm]	PN 16-25	PN 40	PN 64-100	[mm]	[mm]	[mm]
25	1"	215	222	214	223	231	114	104	93
40	11/2"	230	258	223	241	247	114	104	93
50	2"	240	270	242	265	278	114	104	93
80	3"	315	310	322	331	364	114	104	93
100	4"	300	350	361	398	427	114	104	93
150	6"	375	425	435	467	489	114	104	93
200	8"	450	505	466	546	612	114	104	93
250	10"	530	570	482	555	621	114	104	93
300	12"	610	710	671	796	868	114	104	93

Notation

The shut-off valves are identified by specifying the model, the nominal dimensions of the inlet-outlet connections and the maximum working pressure.

SB	770	-	X	-	X	-	X		Description
					025				DN 25
					032				DN 32
					040				DN 40
					050				DN 50
					080				DN 80
					100				DN 100
					150				DN 150
					200				DN 200
					250				DN 250
					300				DN 300
							016		PN 16
							025		PN 25
							040		PN 40
							064		PN 64
							100		PN 100

For example, the SB 770-050-025 notation designates a 770 shut-off valve with nominal diameter of connections DN 50 and maximum working pressure of 25 bar.

The manufacturer reserves the right to make modifications without any prior notification.

CT No. 220 / 2009

TOTALGAZ INDUSTRIE
Nr. R.C.: J-22-3277/1994
CUI: RO6658553

IBAN: RO28BRDE240SV13842272400
B.R.D. G.S.G. Iaşi

Şos. Păcurari, nr. 128,
Iaşi, cod 700545, România
Tel. : 0040-232-216.391(2)
Fax : 0040-232-215.983
E-mail: office@totalgaz.ro
Web: www.totalgaz.ro

Certified Management System